Pro Split R

0.0V drop alternator splitting system built to IP65

12V/24V. 120A-250A.
Up to 2 alternator inputs and 4 outputs.

The Pro Split R is a 0.0V drop alternator splitting system. It is the successor to the old diode based splitting systems which induced large voltage drops at high current. The newer, much more intelligent, Pro Split R selects a battery banks and isolates the other battery banks to prevent their voltage misleading the alternator's regulator (assuming regulator is connected). This allows the regulator to focus on the correct battery and can maximise the alternator's potential. Then, at a specific level, the other battery banks are charged and finally all charged together. The charging performance can be further enhanced with the use of an **Advanced Alternator Regulator** (see pages 12/13).

Isolates the battery bank(s): The unit isolates when there is any attempt to back feed the power from the full battery bank to a more demanding battery.

Comprehensive L.E.D. display: that shows which channels are in use and which are not.

Micro Processor Controlled: All batteries are charged in conjunction with each other and back feed under high load conditions is prevented. The system also has the ability to disconnect the alternator and individual battery bank outputs in the case of problems caused by the alternator to other devices.

0.01 voltage drop through the current range :
This negligible voltage drop is far superior in performance in comparison to the old diodes based splitting systems which suffered from a far greater voltage drop.

Alternator Regulators: The sense stud on the Pro Split R allows seamless integration of Sterling's alternator regulator with this 0.0V splitter resulting in the ultimate split charging device.

Overload Design: The model rated for 180A is actually continually rated for 240A with overload in excess of 2000A.

Backfeed protected:
If there is a defective battery charger on one battery bank trying to back feed into another battery bank, the unit would disconnect that battery bank to save others.

High Safety Elements Built In:
As much safety and control is built in as possible to protect your electrical system and to ensure available power is directed to where it is required most.

Distributes the most power: to the battery bank which demands it.

Faster Battery Charging: 0.0V drop allows for a much faster charge. Additionally, once the Pro Split R is happy with the charge state of the starter battery the focus of the charge is directed to the larger domestic/house bank. This ensures a one on one charging experience between the alternator and house. N.B. The starter battery is always monitored and then prioritised if needs be.

Isolates the main alternator: If the alternator was to fail, the Pro Split R would isolate all batteries to protect them from over charging (boiling).

Fail-Safe: In the event of unit failure, the engine start battery and alternator remain connected. This ensures the safe running of the boat/vehicle. It prioritizes the engine start battery charging over all other battery bank outputs.

Larger Models: The image to the right is of the largest Pro Split R in the range. It handles 2 alternators in and 4 outputs. The outputs include 2 x starter batteries (one on each side) and 2 auxiliary banks. The alternator maximum is 130A at 12V for this model.

Works with 2 x alternator regulators: Provides a 4 stage charging profile to each of the 4 outputs for super fast charging on all banks.

Not suitable for any modern European vehicle or any vehicle equipped with an advanced ECU. For suitable products look to the range of Regenerative Braking Friendly, such as the Battery to Battery Charger.

Examples of the problem where the old diode system can potentially be detrimental to both your battery charging rate and your batteries health/longevity.

Example 2
This example is with an intelligent regulator fitted.
Note the 15.2V at the Engine Battery. This battery shall over charge.
Note the 14.2V at the Domestic Battery. This battery shall under charge.
At higher current voltage drop across the **diode** is higher.

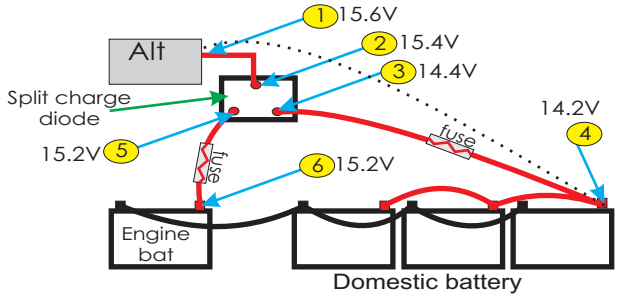

Example 1
Note the 12.8V at the Domestic Battery.
This battery shall not receive any charge and shall sulphate.
At higher current voltage drop across the **diode** is higher.

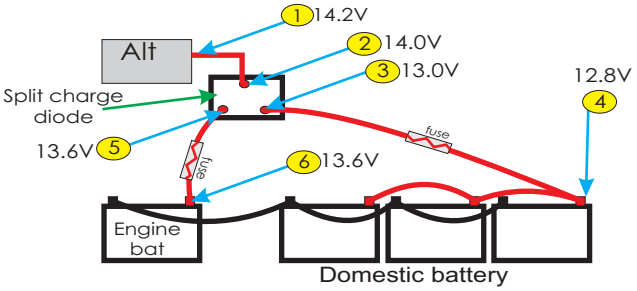

Example 3
Note the 15.8V at the Engine Battery.
This battery shall boil

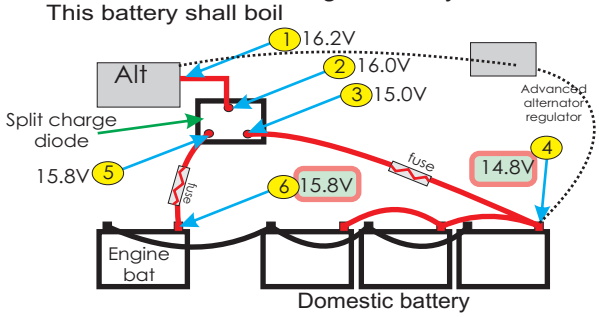

Shared key

1= Alternator Voltage
2= Input to diode Voltage
3=Output diode Voltage to domestic battery
4=Voltage at battery terminal
5= Output Voltage to engine start battery
6=Actual Voltage at engine battery

The Cure. The **Pro Split R** has the cure to the diode based issues.

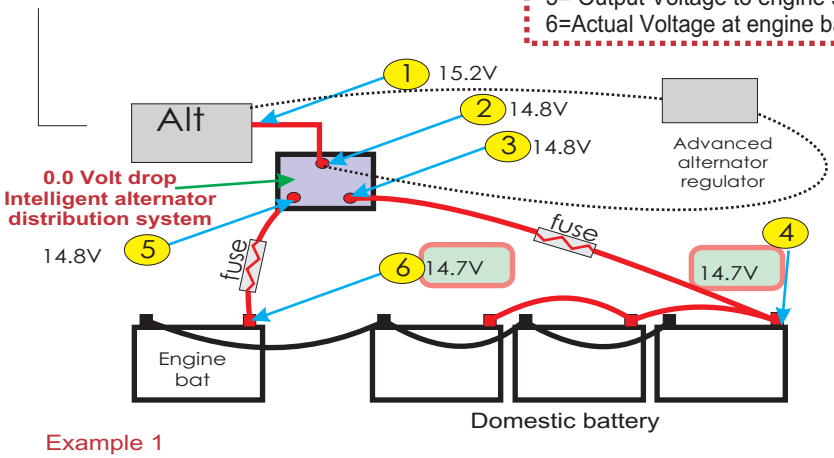

Example 1
This example is with an intelligent regulator fitted.
Note the 14.7V at the Engine Battery. This battery shall charge properly.
Note the 14.7V at the Domestic Battery. This battery shall charge properly.
At higher current voltage drop across the **Pro Split R** is negligible providing a better charging system.

Pro Split R 0.0 volt drop intelligent splitter

DC (V)	Max Alt (A)	Battery banks	Size L x W x D mm	Weight Kg	Code
12	120	2	150 x 80 x 120	0.6	PSR122
12	180	2	150 x 80 x 140	0.7	PSR182
12	250	2	150 x 80 x 155	0.9	PSR252
12	120	3	150 x 80 x 130	0.9	PSR123
12	180	3	150 x 80 x 150	1.0	PSR183
12	250	3	150 x 80 x 180	1.3	PSR253
Twin 12	2 x 130	4	150 x 80 x 295	1.8	PSRT134
24	60	2	150 x 80 x 120	1.8	PSR62
24	100	2	150 x 80 x 140	0.6	PSR102
24	150	2	150 x 80 x 165	0.7	PSR152
24	240	2	150 x 80 x 250	1.2	PSR242
24	60	3	150 x 80 x 150	0.7	PSR63
24	100	3	150 x 80 x 175	1.0	PSR103
24	150	3	150 x 80 x 220	1.3	PSR153
Twin 24	2 x 80	4	150 x 80 x 295	1.8	PSRT84